STERLING CRANE

LIFTING CHARTS - All Terrain Cranes

DEMAG MODEL AC 400 - 500 TON CAPACITY

Dimensions

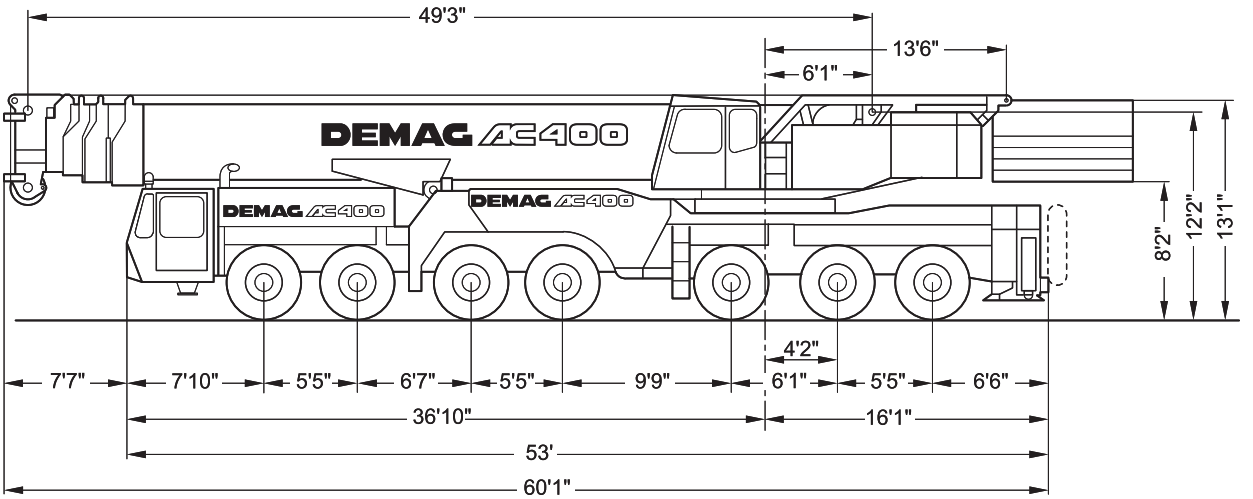

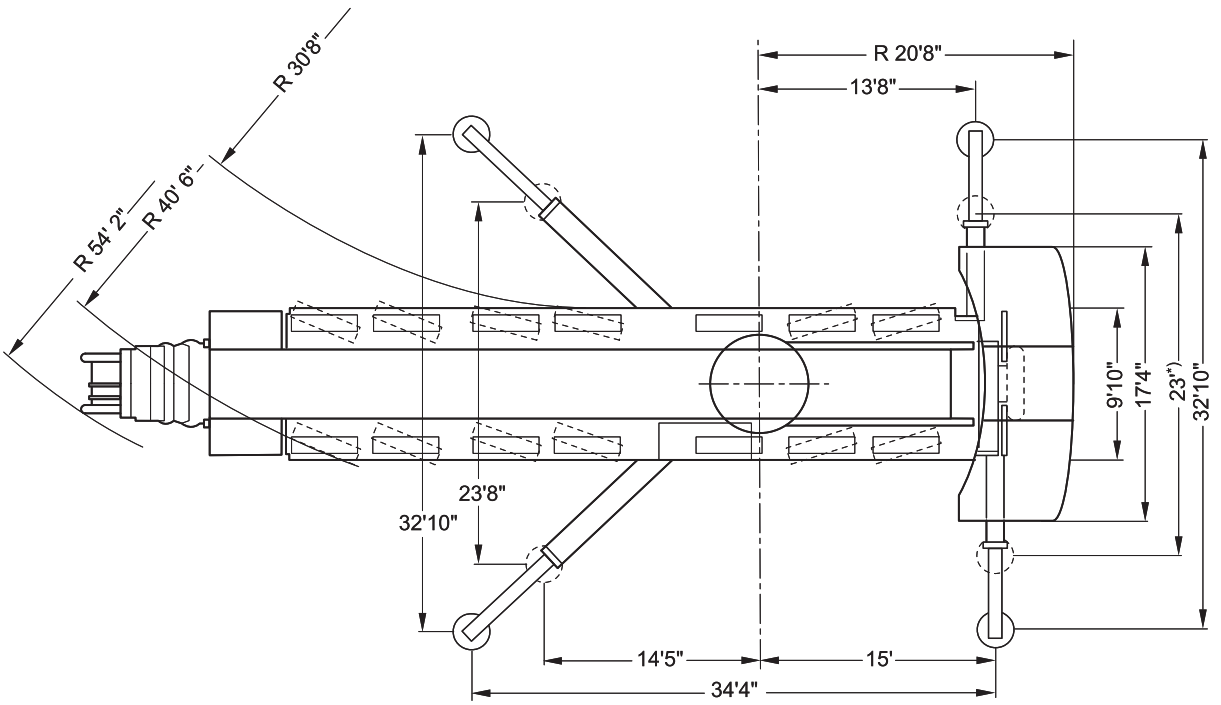

*) Duties with reduced outrigger base on request