STERLING CRANE

TRANSPORTATION SPECS - Conventional Truck Cranes

LINK-BELT MODEL HC-278H - 300 TON CAPACITY

COMPONENT WEIGHTS	LBS.	KGS.
Complete Crane C/W 70' Boom, Full Counterweight, Block & Ball	320,123	145 207
House, Butt, Carrier c/w Outriggers	173,890	78 876
House c/w Butt	77,130	34 986
Carrier c/w Outriggers	96,760	43 890

ADDITIONAL INFORMATION		LBS.	KGS.
200 Ton Block (6 Sheave)		5,721	2 595
75 Ton Block (3 Sheave)		1,700	772
15 Ton Ball		1,400	635
Counterweights: Upper	A	30,000	13 608
	B	25,200	11 431
	C	21,500	9 752
	D	21,500	9 752
Bumper	A	11,400	5 171
	B	15,300	6 940
Front Outrigger		10,560	4 791
Rear Outrigger		10,560	4 791
Main Outrigger Jacks and Floats		5,060	2 296
Main Load Line 1 1/8" x 1,025'		2,399	1 088
Auxiliary Load Line 1 1/8" x 1,084'		2,537	1 151
Boom Hoist Line 1" x 870'		1,610	730
Third Drum Line 1" x 1,050'		1,943	818
Third Drum Sheave for Butt Section		2,373	1 076
Third Drum Sheave Assembly for Tip		2,832	1 285
Tire Size: 14 x 25			

TRANSPORTATION

Carrier
Max. 60 km/hour
37.5 mph

BOOM TYPE: TUBULAR 80" X 68"		LBS.	KGS.
Open Throat: Min 60' – Max. 30'			
Butt Section 30'		4,912	2 228
Self Assembly 10'		3,275	1 486
Insert 20'	2 pcs. ea.	2,163	981
Insert 40'	1 pc.	3,687	1 672
Insert 50'	3 pcs. ea.	4,538	2 058
Tip 30'		5,612	2 546

LUFFING BOOM TYPE: TUBULAR 100" X 85"			
Open Throat Min: 140' – 250'			
Butt Section 35'		10,000	4 536
Insert 30'	2 pcs. ea.	3,464	1 571
Insert 40'	1 pc.	4,609	2 091
Insert 50'	1 pc.	5,608	2 544
Tip 7.5'		1,000	454
Bridle		2,000	910
Luffing Balance Arm 43'		7,500	3 402
Luffing Mast 35'		2,000	907
Tires & Bracket		1,000	454

FIXED JIB: TUBULAR 32" X 24"			
Min 30' – 100'			
Jib Mast, Butt & Tip 30'		2,180	989
Insert 10'	1 pc.	259	117
Insert 20'	3 pcs. ea.	442	200

LUFFING JIB: TUBULAR 80" X 68"		
Min 100' – 200'		
Luffing Butt 10'	1,000	454

NOTE: Jib inserts and tip are 80" x 68" Boom Sections from above.

Specifications

Lattice Boom Truck Crane

HYLAB Series

General Dimensions	English	*Metric*
Overall width, outriggers extended (over pontoons)	27’ 4”	*8.33m*
Overall width, outriggers extended (c/l of pontoons)	24’ 6”	*7.46m*
Overall width, outriggers retracted, jacks removed	11’ 10”	*3.61m*
Vehicle clearance circle over outside of front bumper	122’ 10”	*37.44m*
Vehicle clearance circle over outside of front bumper ctwt.	125’ 10”	*38.35m*
Minimum ground clearance (at bottom of front bogie beams)	8.88”	*0.22m*
Counterweight tailswing (at corners)	18’ 9”	*5.69m*
Overall width (upper)	11’ 10”	*3.61m*
Radius of boom foot pin	3’ 2”	*0.97m*
Height of boom foot pin	7’ 3.38”	*2.22m*
Ground clearance under counterweight	5’ 5.38”	*1.65m*

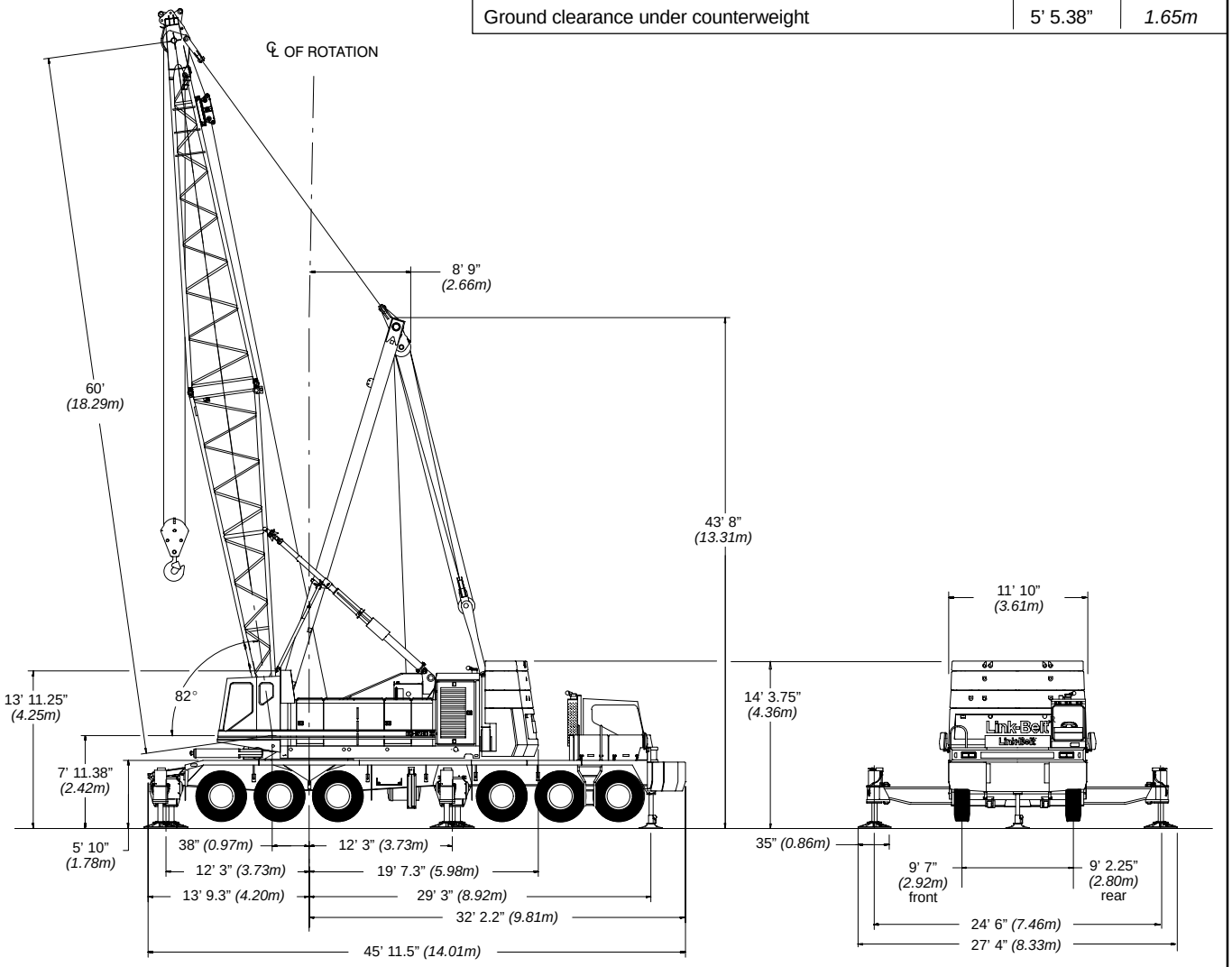

HC–278H Crane Transport Weights and Dimensions – approximate

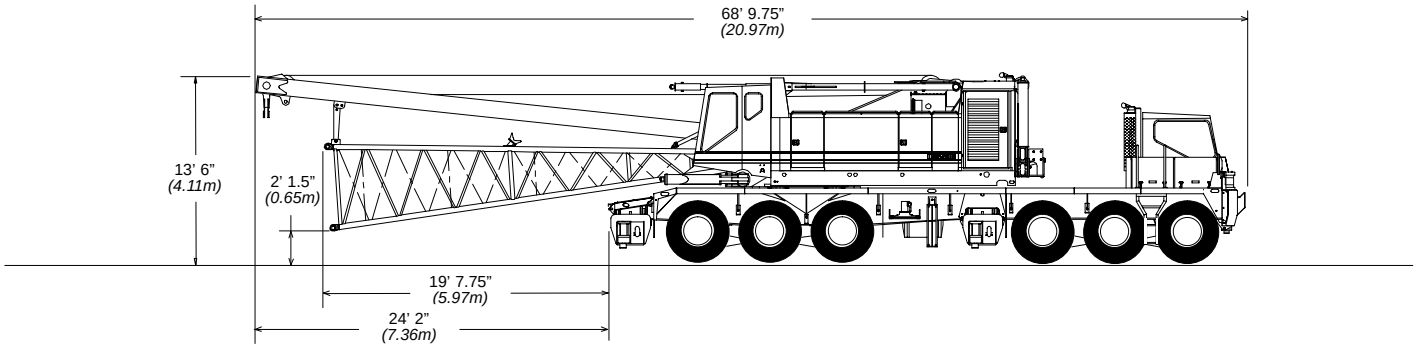

Transport Weights
without boom base – 168,824 lb *(76 577kg)*
with boom base – 173,736 lb *(78 805kg)*
with boom base and 10 ft self–assembly section – 177,011 lb *(80 291kg)*

Note: Carrier undecked with outrigger boxes and without jacks = 70,500 lb (31 978kg)

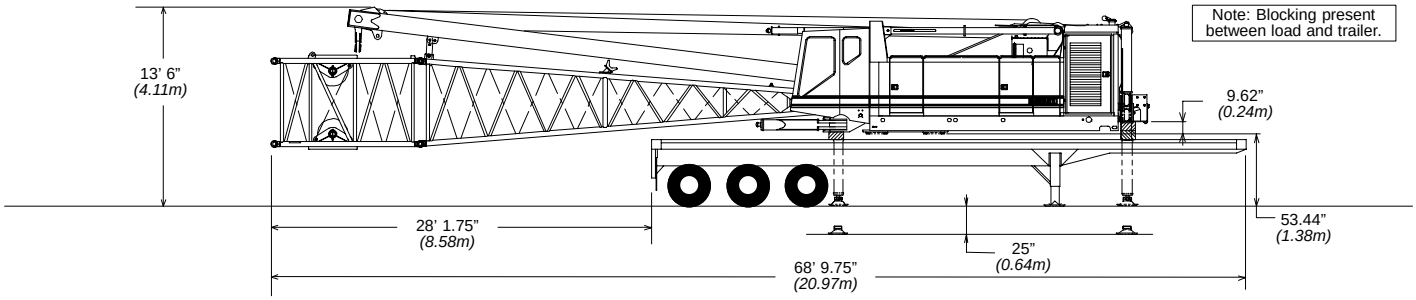

Transport Weights
without boom base – 76,976 lb *(34 916kg)*
with boom base – 83,173 lb *(37 727kg)*
with boom base and 10 ft self–assembly section – 84,757 lb *(38 446kg)*

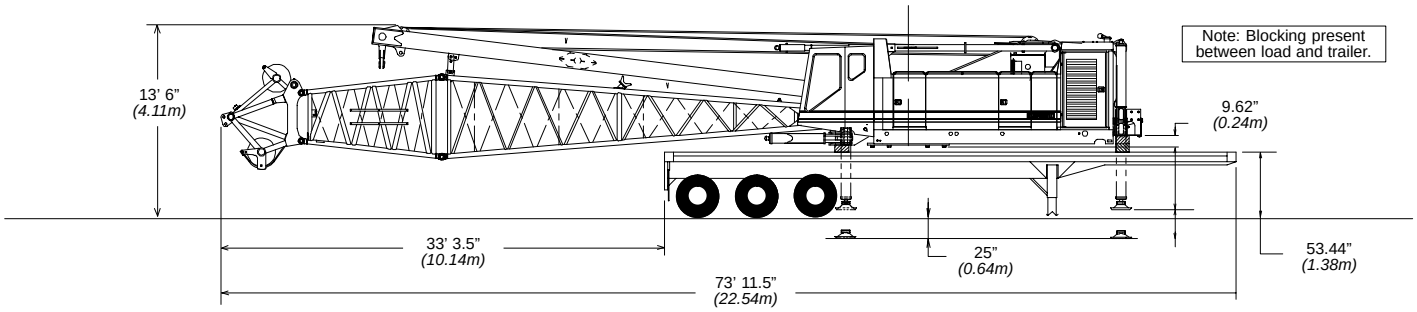

Transport Weights
with hammerhead and transition section and head machinery – 86,996 lb *(39 461kg)*

HC–278H Crane Transport Weights and Dimensions – approximate

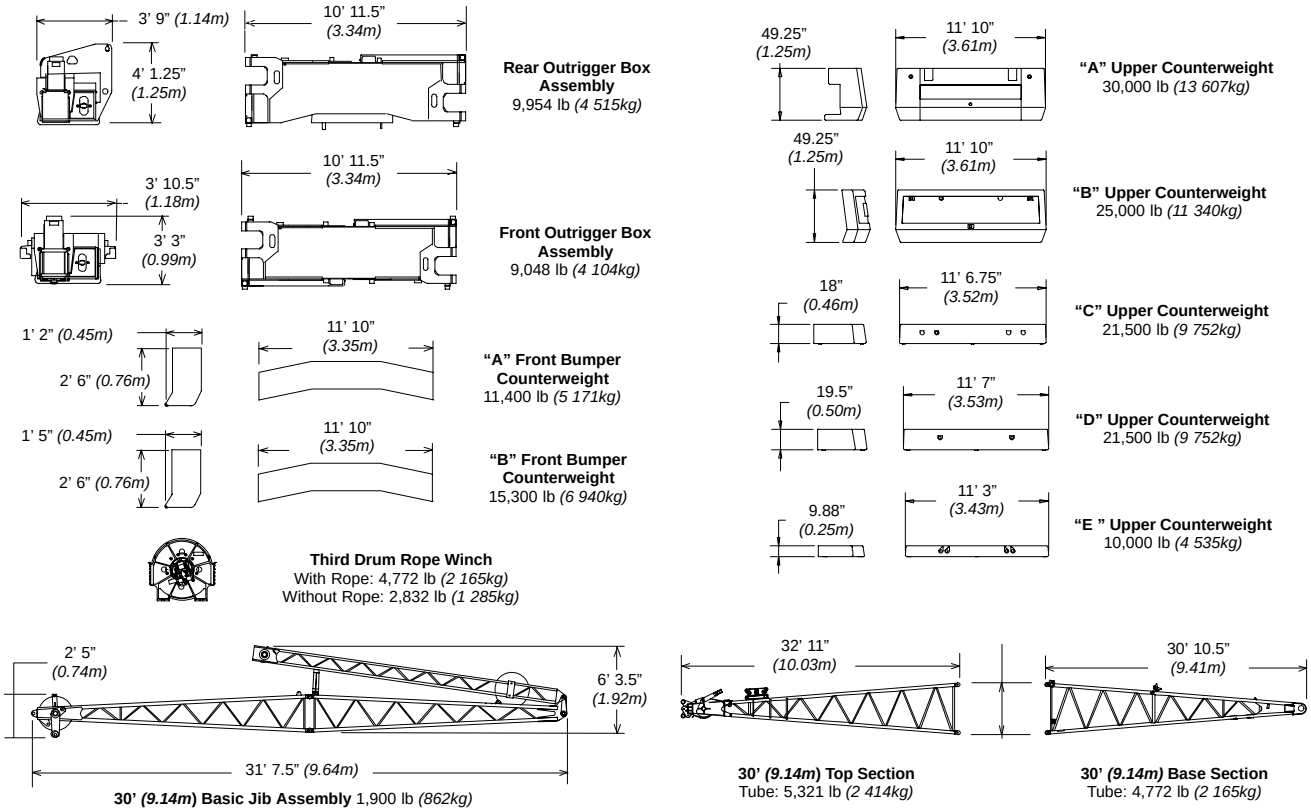

HC–278H Luffing Attachment Dimensions

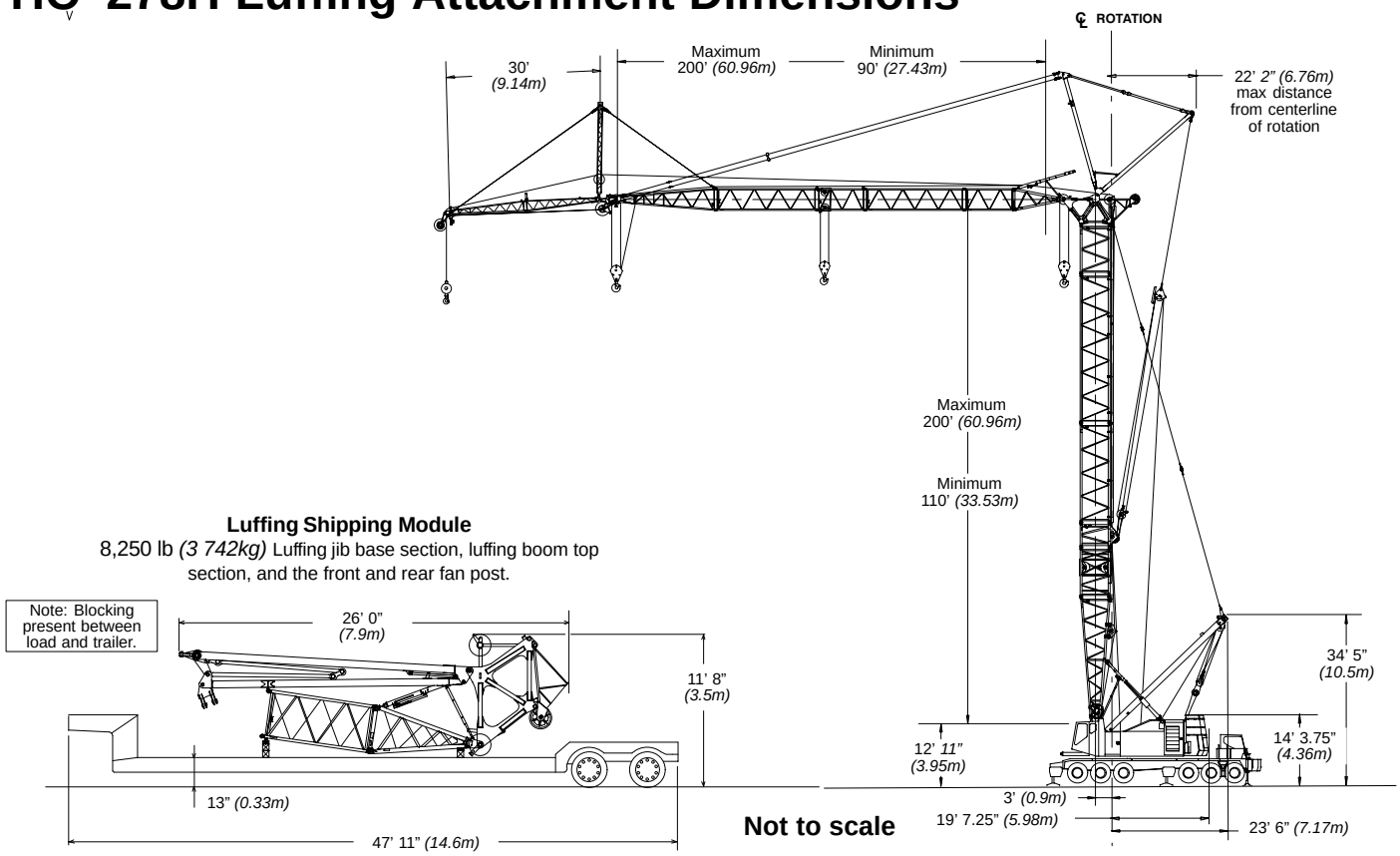

Transport loads

Carrier

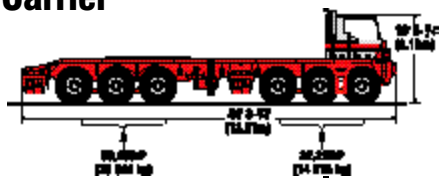

HC-278H II carrier	91,620 lbs	*(41 559 kg)*
Outrigger boxes and beams in place		
Outrigger jacks removed		

Load #2

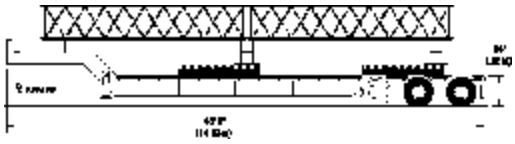

Upper ctwt "C"	21,500 lbs	*(9 752 kg)*
Upper ctwt "D"	21,500 lbs	*(9 752 kg)*
4 - 20' (6.10 m) jib extensions	1,770 lbs	*(803 kg)*
	44,770 lbs	*(20 307 kg)*

Load #3

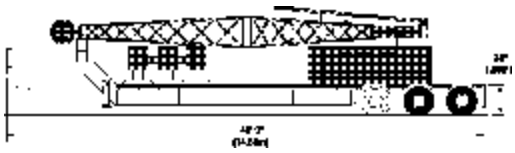

Upper ctwt "A"	30,000 lbs	*(13 608 kg)*
Outrigger jacks, floats and handling tree	6,400 lbs	*(2 903 kg)*
Basic 30' (9.14 m) jib	1,900 lbs	*(862 kg)*
Rigging box	4,000 lbs	*(1 814 kg)*
	42,300 lbs	*(19 187 kg)*

Load #4

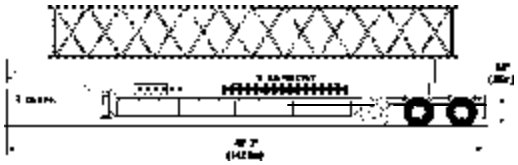

Upper ctwt "B"	15,300 lbs	*(6 940 kg)*
Upper ctwt "E"	10,000 lbs	*(4 536 kg)*
200-ton (181 mt) 6 sheave block	3,900 lbs	*(1 769 kg)*
50' (12.19 m) boom inserts	5,143 lbs	*(2 333 kg)*
	34,343 lbs	*(15 578 kg)*

Load #1 (Alternate "A")

HC-278H II upper with base section, special 10' (3.05 m) extension with lifting sheaves and wire rope	85,024 lbs	*(38 566 kg)*

Load #1 (Alternate "B")

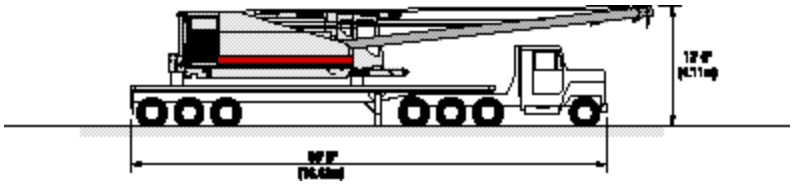

HC-278H II upper with live mast only	72,739 lbs	*(32 994 kg)*

Load #1 (Alternate "C")

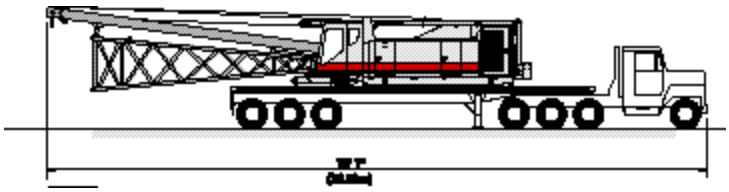

HC-278H II upper with base section and live mast	77,511 lbs	*(35 158 kg)*

Load #5

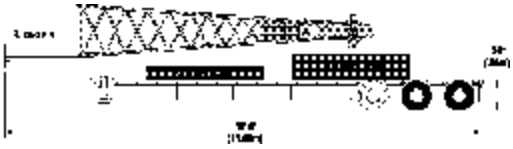

Boom tip	5,175 lbs	*(2 347 kg)*
Bumper ctwt "A"	11,400 lbs	*(5 171 kg)*
Upper ctwt "B"	25,200 lbs	*(11 431 kg)*
	41,775 lbs	*(18 949 kg)*

Loads #6 & 7

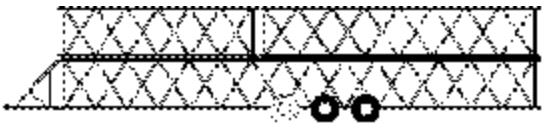

Load 6:

100' (30.48 m) boom	11 598 lbs	*(5 261 kg)*

Load 7:

100' (30.48 m) boom	9,650 lbs	*(4 377 kg)*